Product web page : [1064 nm laser diode]

1060 nm laser diode

550 mW / singlemode fiber / Butterfly package

Reference: 1064LD-1-0-0 Technology : Single mode Fabry Perot with Bragg Grating*

SPECIFICATIONS	Unit	Min	Typ	Maximum
Output Power (nominal/kink free)	mW	500/550		
Center Wavelength	nm	1058	1060	1062
Spectral Width (CW/Pulse)	nm(FWHM)			0.2/1.0
Threshold Current	mA			70
Operating Current	mA		950	1050
Operation Voltage	V			2.0
Wavelength shift w Temperature	nm/°C			0.02
Power in Band	%	90		
Polarization Extinction Ratio	dB	13		
Internal Photodiode Responsivity	mA/W	0.5		10
Internal Photodiode Dark Current	nA			100
TEC current (Case @ 75°C)	A			1.4
TEC Voltage (Case at 75°C)	V			3.2
Internal thermistor (25°C)	kOhm	9.5		10.5
Fiber type	PM fiber : SM98-PS-U25D-H or Nufern PM980			
Fiber bend radius	mm	16 (abs min)		
Coating diameter	µm	230	250	270
Storage case temperature	°C	-40 (abs min)		85 (abs max)
Operating case temperature	°C	-20 (abs min)		75 (abs max)
Lead soldering temperature	°C			280
Laser diode reverse voltage	V			2.0
Pigtail Termination	Ferrule			
Polarization state	Aligned to the slow axis			

*: See our tutorial : [fiber coupled laser diode]

Form factor:

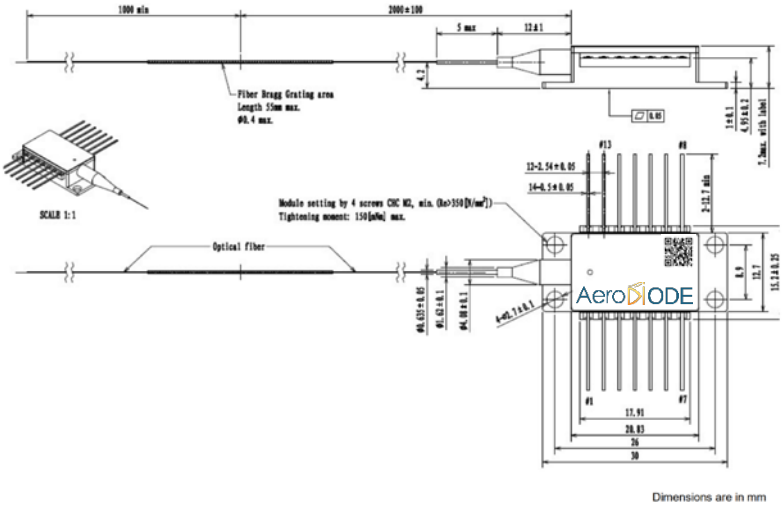

Laser diode pinning :

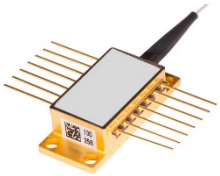

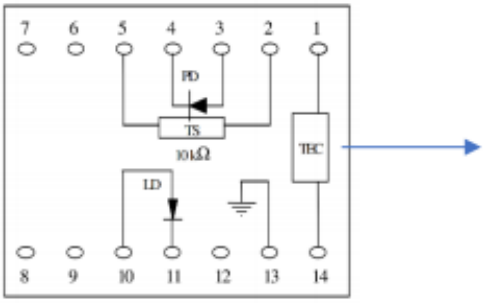

Totally floating pin-out

AERODIODE - Institut d'optique d'Aquitaine - Rue François Mitterrand
33400 Talence - France - Tél. : +33 (0)6 27 69 41 52
contact.aerodiode@aerodiode.com - **www.aerodiode.com**
SIRET 880 329 636 00018 - N° TVA intracommunautaire : FR 87880329636

Revision 1.0 – fev 2021